Digital 8 Inputs 8 Inputs/Outputs DC 24 V RIO 8I 8I/O

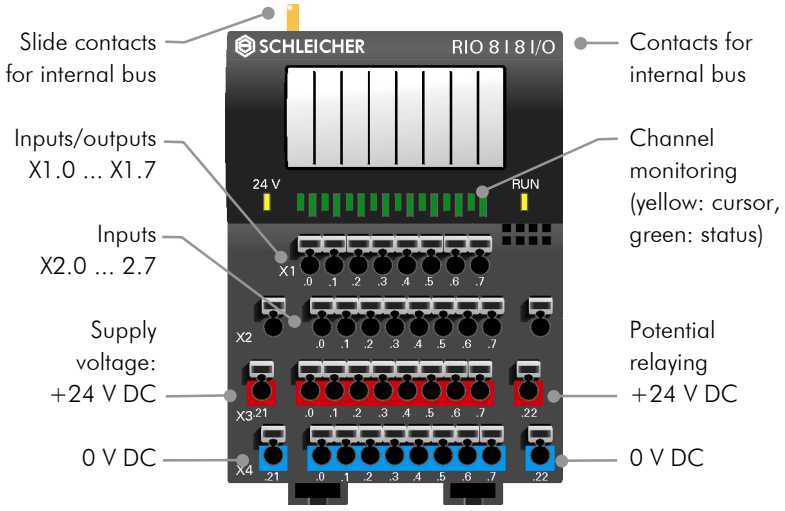

Block diagram

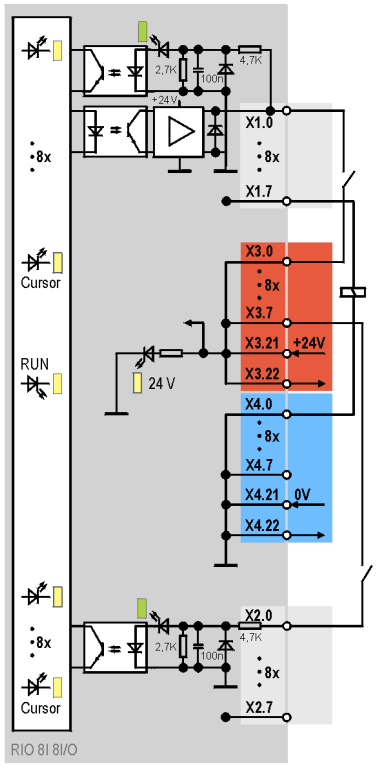

The RIO 8I 8I/O digital module provides 8 inputs and 8 combination channels. Each combination channel can be used as input or output as required. The respective assignment is detected automatically by the module. The channels are isolated from the internal bus. The signal state of each channel can be read on an LED. The maximum output current per channel is 1 A. If more current is required the outputs can be connected in parallel in groups of four. Additional jumper levels can be created with the pluggable terminal extension.

Technical Data	RIO 8I 8I/O
Article number	368 156 70
Number of inputs/outputs	8 inputs and 8 binary combination channels, which can each be used as input or output
Data width	1 bit per channel I/O
External supply voltage	DC 24 V (±20%, max. 5% residual ripple)
Power consumption	0.25 W (without input current/load current) from external 24 V supply 0.325 W from internal 5 V supply
Connection system	Two-wire (with RIO KE 16 terminal extension: four-wire)
Inputs	
Switching level	H level +15 ... +30 V L level –30 ... +5 V
Input current	Min. H level (+15V): I ≥ 2.5 mA / 3.6 mA * Max. L level (+5V): I ≤ 0.7 mA / 1.2 mA * Typ. (+24 V): I = 4.5 mA / 6.1 mA * * for combination channels
Isolation	Each channel individually isolated from internal bus by optocouplers
Signal delay	<100 µs (hardware)
Outputs	
Switching level	H level: supply voltage -0.5 V L level: ≤ 1 V
Output current per output	Max. 1 A, short-circuit-proof and overcurrent-protected, can be connected in parallel: 0-3, 4-7
Total current for whole module	Max. 8 A
Simultaneity	100%
Free-wheeling diode	Integrated
Isolation	Each channel individually isolated from internal bus by optocouplers
Signal delay	<100 µs (hardware)
For general technical data see next page	

Technical Data RIO IP20

Electrical data	
Supply voltage	24 V DC ± 20% max. 5% residual ripple

Connection system	
Sensors / actuators	Spring terminal
Field bus	Profibus-DP: Subminiature, 9-pin Interbus: Screw terminals CAN DeviceNet / CANopen: Open style connector
Supply voltage	Spring terminal
Cable cross-section	Finely stranded 0.14 – 1.5 mm^2, single-core 0.5 – 2.5 mm^2

Housing and installation	
Type of protection	IP 20 to EN 60529
Dimensions (W x H x D)	RIO microLine PLC: 74.5 x 93 x 51 mm RIO BC Bus Couplers: 74.5 x 93 x 51 mm RIO EC Bus Couplers: 63 x 93 x 51 mm RIO Expansion Modules: 69 x 93 x 51 mm RIO Compact I/Os: 69 x 93 x 51 mm RIO Terminal Extensions: 69 x 36 x 45 mm
Rail	DIN rail EN 50022-35
Installation position	Vertical, free air circulation

Climatic Conditions	
Ambient operating temperature	0 ... +55°C (category KV to DIN 40040)
Storage temperature	–25 ... +70°C (category HS to DIN 40040)
Relative humidity	30 ... 95% (category F to DIN 40040), no condensation
Air pressure in operation	860 ... 1060 hPa

Mechanical strength	
Vibration	10 ... 57 Hz constant amplitude 0.075 mm 57 ... 150 Hz constant acceleration 1 g (to DIN IEC 68-2-6)

Electromagnetic compatibility	
Electrostatic discharge	EN 61000-4-2: 4 kV contact discharge
Electromagnetic fields	EN 61000-4-3: field intensity 10 V/m, 80 ... 1000 MHz
Burst	EN 61000-4-4: 2 kV on DC supply lines, 1 kV on I/O signal and serial interface lines
Interference emissions	EN 55011: Limit Category A, Group 1